7. Clean sticker areas of facia plate

   Attach replacement stickers for

   PASSENGER (right)

   PASSENGER AIRBAG OFF (left)

   on double DIN facia plate (see arrows)

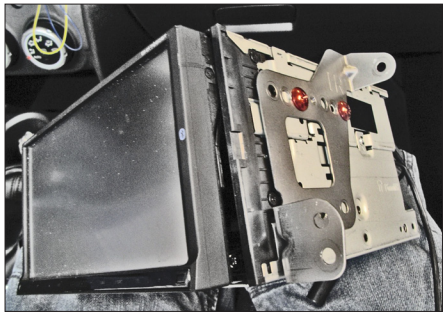

8. Attach metal mounting brackets to double DIN Navigation

   Connect all required circuit points

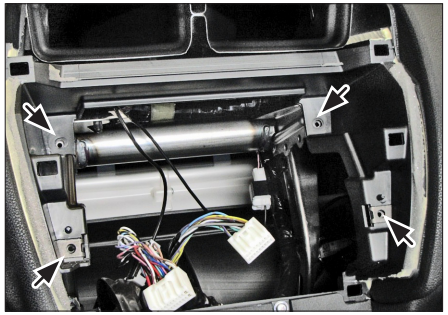

9. Connect all required circuit points

   Place navigation and fix it (see arrows)

10. Connect harzard light switch connector an other required connections

    Place facia plate until it snaps in

Installation Manual
Double DIN Kit

make / type	colour	part-no..:
• Mitsubishi ASX 06/2010->	black	381200-11
• Mitsubishi ASX 06/2010->	black	281200-11 (with pocket)
• Citroën C4 Aircross Type B 06/2012-> • Peugeot 4008 Type B 06/2012->	black-nacre (piano-optic)	381200-11-2

Double DIN Kit contents

(1) Facia Plate
(2) Mounting Bracket Right
(3) Mounting Bracket Left
(4) Replacement PCB
(5) Sticker
(6) Fixing Screws
(7) *Pocket (1-DIN install)**
**ONLY for 281200-11*

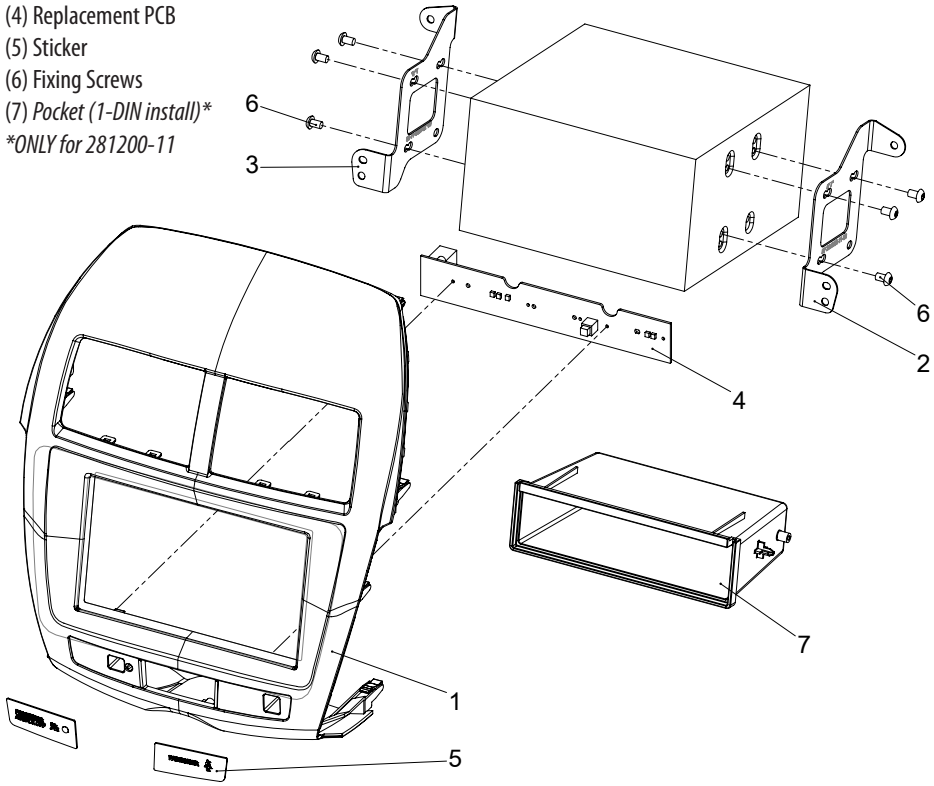

© 09/2010 ALL RIGHTS RESERVED. Technical changes possible. No liability for misprints.

Installation Manual Double DIN Kit Mitsubishi ASX

1. Mitsubishi ASX with OEM-Radio

   Unclip OEM center panel
   Unplug cables carefully

   Remove OEM center panel

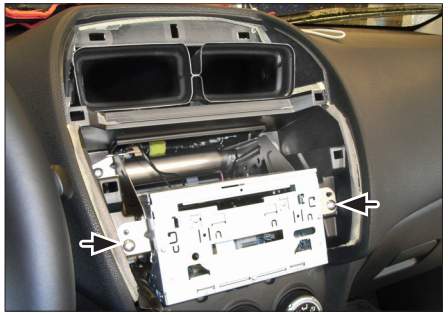

2. Remove OEM Radio/CD device

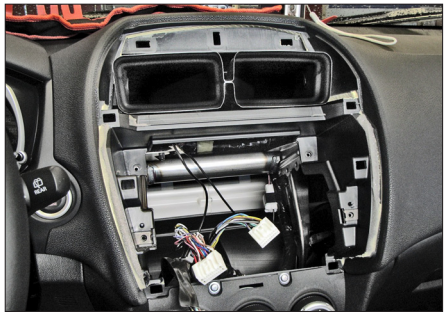

3. Dashboard with removed OEM Radio/CD device

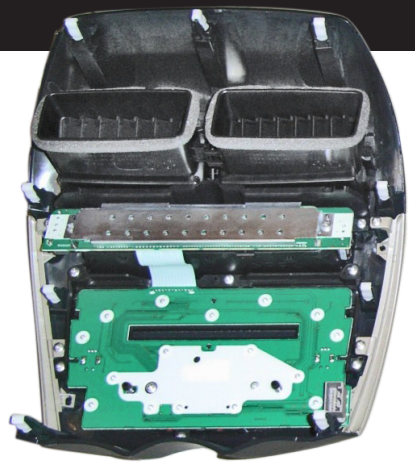

4. Dismount air vents left and right. Remove OEM circuit board (PCB).

   Dismount hazard light switch
   Dismount silver side panels
   Dismount clips

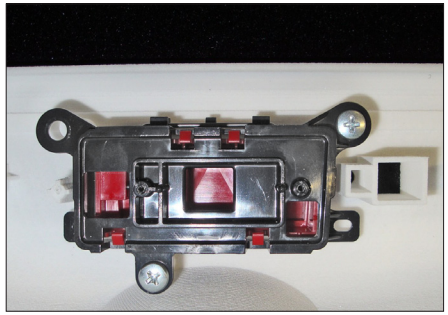

5. Mount hazard light switch to facia plate

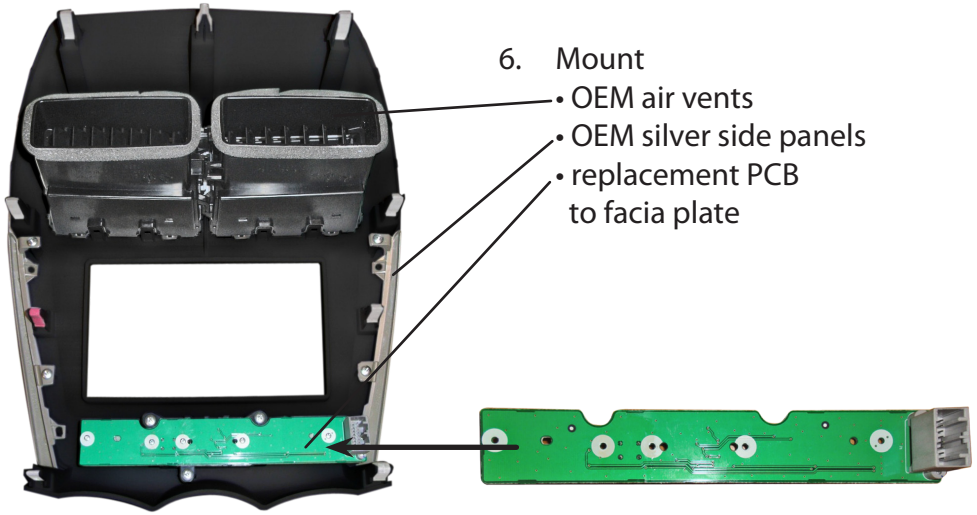

6. Mount
   - OEM air vents
   - OEM silver side panels
   - replacement PCB to facia plate

All installation work must be performed by a qualified professional installer only.
The manufacturer / dealer is not liable for any kind of incidential or indirect damages.